1550nm Infrared Laser-800

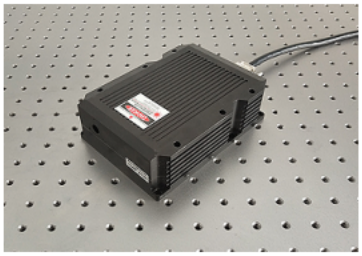
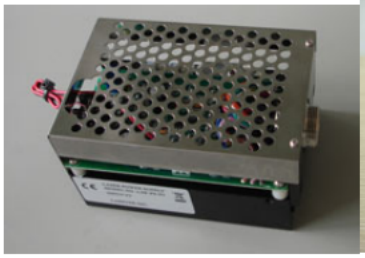

FEATURES

Multiple diode laser
Compact size
Long lifetime
High reliability

APPLICATIONS

Laser material&
Biology inspection

Specifications

Model No.	BDT-M1550-15W
Output power	8W, 10W, 15W
Wavelength	1550+/-10nm
Linewidth	10~20nm
Spatial Mode	Multi-mode
Operation Mode	CW or Modulation
Beam Height	34mm
Beam Size	5x5mm
Beam Divergence(full angle)	4x1.5mrad
Power Stability	<3% per 4 hrs
Warm Up Time	<1 minute
MTTF	10,000 hrs
Laser head dimensions	185(L)x128(W)x50.5(H)mm³
Power Supply	A. OEM type 142(L)x59(W)x38(H)mm³ PSU: 85~265V 50/60Hz input
	C.Lab Adjustable type 178(W)x197(D)x84(H) mm³ 85~265V 50/60Hz input
Modulation	0~30khz Analog or TTL

E-mail: sales@erbiumtechnology.com **TEL/FAX:** +86-28-87897578
ADD: No.23,Chaoyang Road, Xihe street, Longquanyi Distrcit, Chengdu, 610107, China.

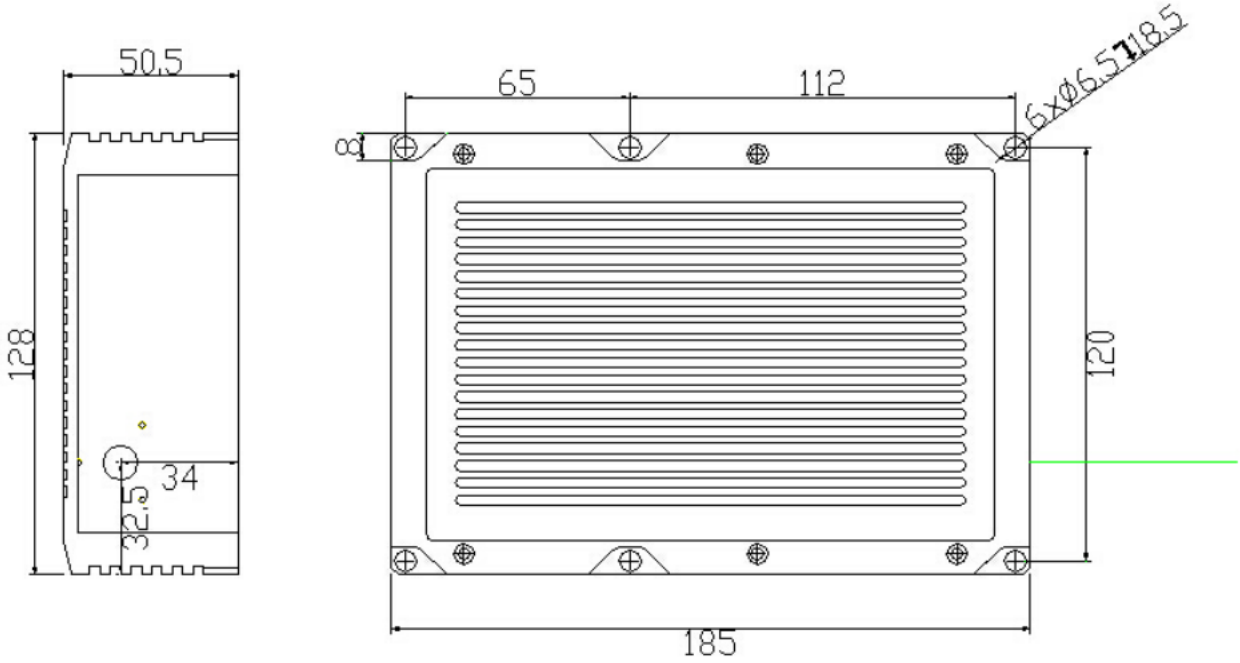

A, OEM power supply

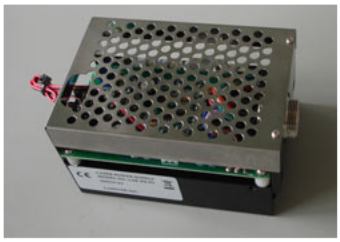

C. Adjustable power supply

E-mail: sales@erbiumtechnology.com TEL/FAX: +86-28-87897578
ADD: No.23,Chaoyang Road, Xihe street, Longquanyi Distrcit, Chengdu, 610107, China.