525nm Green Laser-10W-B

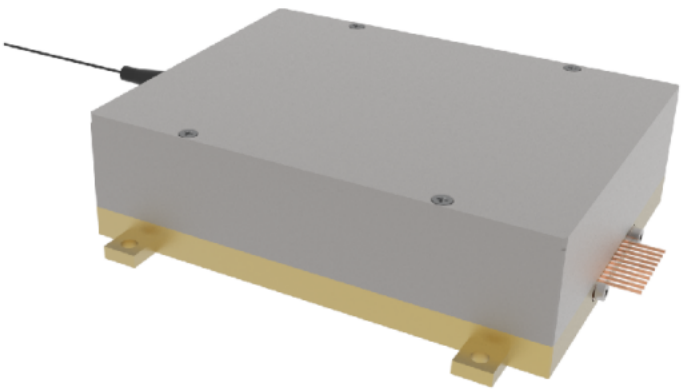

PIC 2-1

Features:

1. Output power 10W
2. Working temperature -40~65 degrees
3. Fiber core diameter minimum 50um

Use:

1.dazzling
2.laser pointer
3.industrial processing

Semiconductor laser components are high-power, high-efficiency, and high-stability products made with professional coupling technology. The product concentrates the light emitted by the chip into an optical fiber with a small core diameter through micro-optical components for output. In this process, every important process is inspected and aged to ensure the reliability, stability and long life of the product.

In production, the researchers continuously improve the product process through professional technology and long-term accumulated experience to ensure the high performance of the product. The company also continues to develop new products to meet the ever-increasing demands of customers. The interests of customers have always been put in the first place, and providing customers with high-quality, cost-effective products is the company's consistent goal.

Typical Product Specifications(25℃)		symbol	unit	Style No. : BDT-B525-W10		
				minimum	Typical value	maximum value
Optical parameters	Output Power	P_o	W	10	-	Customizable 200W
	Center wavelength	c	nm	520±10		
	Spectral width(FWHM)	△	nm	6		
	Temperature Drift Coefficient	△ /△T	nm/℃	-	0.06	-
	Current drift coefficient	△ /△A	nm/A	-	/	-
Electrical parameters	Electro-optical efficiency	PE	%	-	10	-
	Working current	I_{op}	A	-	1.8	2
	Threshold current	I_{th}	A	0.2	0.3	-
	Operating Voltage (1)	V_{op}	V	-	18.5	22
	Slope efficiency	η	W/A	-	6.25	-
	Fiber Core Diameter	D_{core}	μm	-	50	-

E-mail: sales@erbiumtechnology.com TEL/FAX: +86-28-87897578
ADD: No.23,Chaoyang Road, Xihe street, Longquanyi Distrcit, Chengdu, 610107, China.

Fiber parameters	Cladding Diameter	D_{clad}	μm	-	125	-
	Coating Diameter	D_{buf}	μm	-	245	-
	Numerical aperture	NA	-	-	0.22	-
	Fiber length	L_f	m	-	2	-
	Fiber Cover Diameter/Length	-	mm	0.9mm/2m		
	Bending radius	-	mm	50	-	-
	Connector	-	-	-	FC/PC or SMA905	-
Others	ESD	V_{esd}	V	-	-	500
	storage temperature [2]	T_{st}	℃	-40	-	80
	Soldering temperature	T_{ls}	℃	-	-	260
	Welding time	t	sec	-	-	10
	Operating temperature [3]	T_{op}	℃	-40	-	65
	Relative humidity	RH	%	15	-	75

Note

[1] There are a total of 12 semiconductor laser tubes inside the laser, each of which is connected in series to form a road, a total of three strings.

[2]Please store in a non-condensing environment

[3] The operating temperature of the laser refers to the temperature of the base plate. The laser can work in the environment of -40~+65 degrees, but the output power will be different at different temperatures. Generally speaking, the output power of the laser is greater than 70% of the nominal value at 65 degrees.

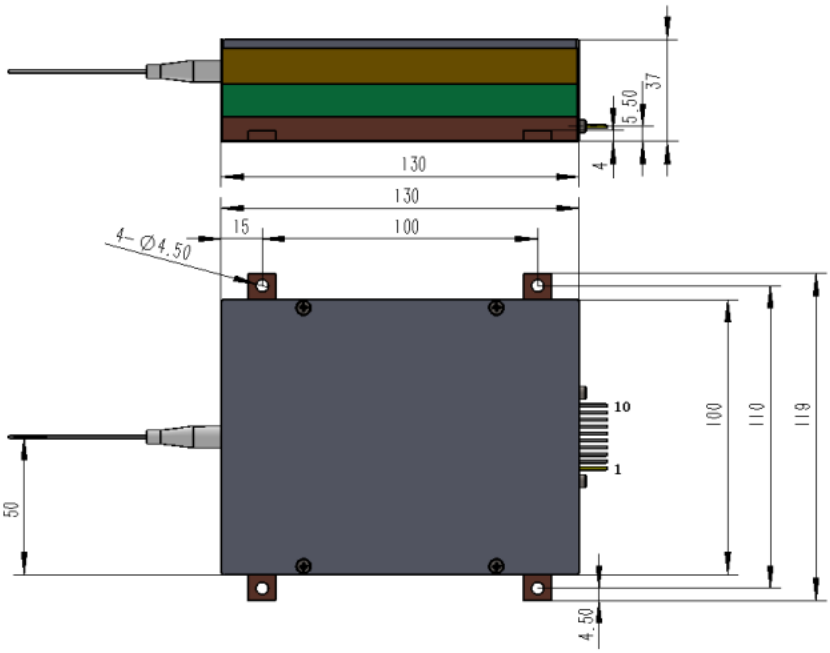

Green Light Dimensions

E-mail: sales@erbiumtechnology.com TEL/FAX: +86-28-87897578
ADD: No.23,Chaoyang Road, Xihe street, Longquanyi Distrcit, Chengdu, 610107, China.

PIN	Pin definition	PIN	Pin definition
1	LD1 +	6	LD3-
2	LD1-	7	Thermistor
3	LD2+	8	Thermistor
4	LD2-	9	dangling
5	LD3+	10	dangling

Instructions for use

When the laser is working, avoid laser exposure to eyes and skin。 Anti-static measures must be taken during transportation, storage and use. Short-circuit protection is required between pins during transportation and storage。 For lasers with a working current of more than 6A, please use welding to connect the leads.。 Before operating the laser, make sure that the fiber output end is properly cleaned. Follow safety protocols to avoid injury when handling and cutting fibers。 Use constant current power supply to avoid surge when working。 Should be used at rated current and rated power。 When the laser is working, it is necessary to ensure good heat dissipation。 Operating temperature-40°C~ 65°C。 storage temperature－20°C~＋80°C。

E-mail: sales@erbiumtechnology.com TEL/FAX: +86-28-87897578
ADD: No.23,Chaoyang Road, Xihe street, Longquanyi Distrcit, Chengdu, 610107, China.