905nm Laser Rangefinder-2000

SKU:LRF905-2000

OVERVIEW

The compact, eye safe and highly integrated OEM laser rangefinder module module is utilized in various applications from versatile systems to handheld devices. The module is delivered without enclosure enabling OEM-users to embed the module into their own system or device. rangefinder laser distance sensor With TTL Output a new generation ranging sensor with optimally-designed emitting & receiving optical lens, suitable for precise, long-distance measurements. It provides accurate distance measurement whatever the target color and reflectivity unlike conventional technologies. Can measure absolute distances up to 2000m on a white target, setting a new benchmark in ranging performance levels, opening the door to various new applications.
Rangefinder laser distance sensor module offers reliable distance feedback & TTL/RS232 serial output. It is suitable for customizing product integration,especially for night vision, thermal or EVA, ect.

TECHNICAL SPECIFICATIONS

MECHICAL INTERFACE

Parameters	Specification
Dimensions(mm）	58.61*30.2*32.60mm（see attachment for details）
Range capability	5-2000m
Resolution	±0.1m
Working current	80mA-150mA
Connector	TTL
Operating Temperature	-20º to 55º
Signal	TTL output
Input voltage	3-5V
Divergence	5 mrad / 2.5mrad
Repetition Frequency(RF)	1Hz
Power	＜1mW（eye -safe）
Ranging method	Pulse
Weight	≤35g

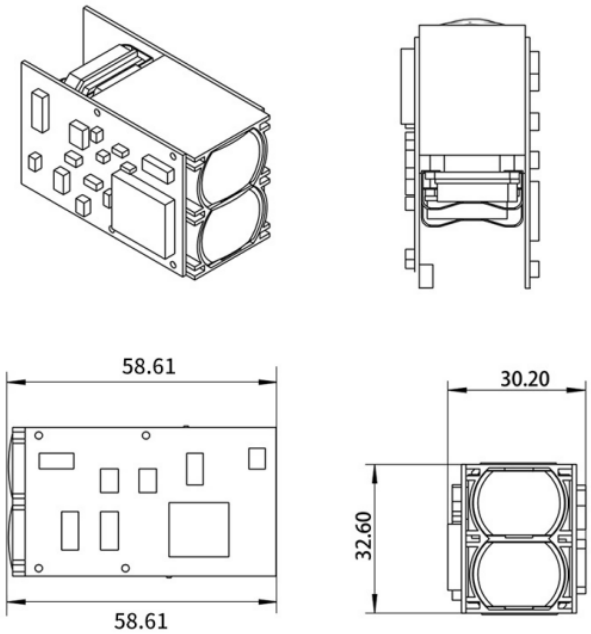

Email:sales@erditechs.com **TEL:** +86-28-81076568 **FAX:** +86-28-87897578
ADD: No.23,Chaoyang road, Xihe street, Longquanyi district, Chengdu, 610107, China.

COMMUNICATION INTERFACE

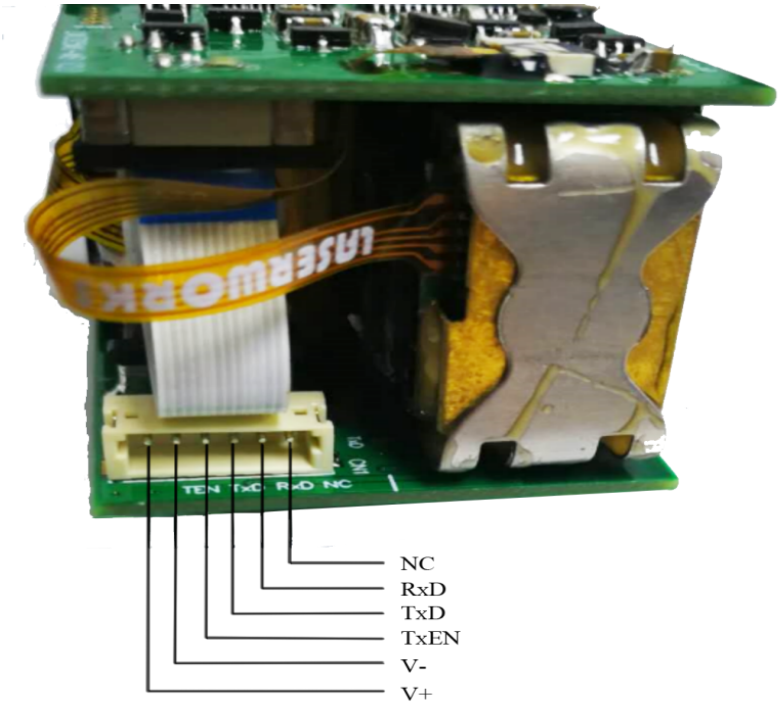

Pin No.	Function description
1	RS232-Tx
2	RS232-Rx
3	Power supply：DC（3.0V - 5.0V）
4	TxEN: When serial port starts to send data frame, TxEN signal is high; After one frame data transmission is over,TxEN signal is low. TxEN Signal can be used to switch from emission to reception as half duplex, such as RS485.
5	GND
6	UART-RxD（TTL: Voltage is programmable：3.0V - 5.0V）;
7	UART-TxD（TTL: Voltage is programmable：3.0V - 5.0V);

Note:

1. **This module has 2 communication serial output, RS232 & TTL. Each can be used by different pin outs, but can't be used at the same time.**
2. **UART Setting: 10 bits are transmitted or received; one start bit, 8 data bits (LSB first), one stop bit, non-parity**

Electrical Characteristics

Parameter	Test condition	Min	Max	Units
Vin	T=25°C	2.5	5.0	V
Icc	Standby(T=25°C, Vin=3.0V)	-	50.0	mA
	Ranging(T=25°C, Vin=3.0V)	-	150.0	mA

COMMUNICATION COMMAND CHART

Master Command

Command code	Description	Broadcast add. response
0x80	Read rangefinder status	NO
0x81	Read measuring result	NO
0x83	Start ranging	NO
0x84	Stop ranging	NO
0x9E	Communication parameter program	YES
0xBE	Read communication parameter	YES
0xC0	Communication test	YES
0xC1	Read Firmware Version	YES
0x8F	Red Laser ON / OFF	YES
Slave Response		
Recognition code	Description	
0x60	Simple reponse Frame	
0x01	Range data frame	
0x20	rangefinder status frame	
0x21	Communication parameter frame	
0xE0	Error message frame	

NOTE:

1. The Communication Frame Format:

   SlaveID + instruction + parameter +checksum

2. The interval between two adjacent frames has to be at least the time of 1.5 byte when sent out, when it is less than 1ms, it is regarded as 1ms;

   600BPS: 25ms

   1200BPS: 12.5ms

   2400BPS: 6.25ms

   4800BPS: 3.125ms

   9600BPS: 1.56ms

   19200BPS: 1ms(0.78ms < 1ms, take 1ms)

3. Sending calculate of checksum;

   This module uses the verification mode of byte by byte accumulation sum, SlaveID is not included in the verification, sending checksum at last.

   Such as calculate check sum of scanning mode instruction"0x83 0x40":

   A、Calculate accumulation sum： 0x83 + 0x40 = 0xC3；

   B、Take LSB[D7..D0]： 0xC3；

   C、Calculate 2's complement： 0x100 - 0xC3 = 0x3D， 0x3D is checksum；

   Add slave address when mater sends: 0x10 0x83 0x40 0x3D

4. Verification receipt;

   Such as receive communication frame: 0x10 0x83 0x40 0x3D, verification not including slave address 0x10

A、Calculate accumulation sum：0x83 + 0x40 + 0x3D = 0x100；

B、Take LSB of accumulation sum: 0x00; 0x00 is verification result；

If verification result is 0x00, that means received data is right; If verification result is not 0x00, that means received data is wrong.

COMMAND DESCRIPTION

Note:In the example, the slave address of each command is 0x10;in application, the slave address will be the programmed one.

1、Communication test（0xC0）

Master sends		
Command code	Parameter	Description
0xC0	None	
Slave responses		
Recognition code	Parameter	Description
0x60	None	
Example		
Master sends：0x10 0xC0 0x40；0x40 is checksum Slave response：0x10 0x60 0xA0；0xA0 is checksume		

2、Command slave to start ranging (0x83)

Master sends		
Command code	Parameter	Description
0x83	byte1	D7: Reserve
		D6: Continuous ranging mode, 0 = off; 1 = on;
		D5: Fog mode, 0 = off; 1 = on;
		D4: Data unit, 0 = meter; 1 = yard;
		D3 - D0: Working Mode, 0 = ranging; 1 = speed; 2 = Small Target Mode;
Slave responses		
Recognition code	Parameter	Description
0x60	None	If slave is set as automatic export mode, slave responds 0x60 first after reception of start ranging command, after ranging is finished, it will then send out ranging result;
Example		
Master sends： 0x10 0x83 0x00 0x7D：Mode 0 is for single measure, data unit is meter; 0x10 0x83 0x40 0x3D：Mode 0 is for continuous mesure, data unit is meter; 0x10 0x83 0x10 0x6D：Mode 0 is for single measure, data unit is yard; 0x10 0x83 0x20 0x2D：Mode 0 is for continuous mesure, data unit is yard; Slave response: 0x10 0x60 0xA0		

Note: 1、If module data export method is set as **query mode**, then it can only do single measure;

2、In speed mode, continuous ranging function is null, that is no continuous speed measure;

3、Fog mode is only valid for device with fog mode function;

4、Slave will send 0x60 response frame after reception of start ranging command, it will start to send ranging result after ranging is finished.

5、Small Target Mode was supported only in V7.00 or newer version;

3、Command slave stop ranging(0x84)

Master sends		
Command code	Parameter	Description
0x84	None	

Note: After master sends command to slave to do continuous ranging, it needs to send this command to slave to stop ranging. If master sends command to slave to do single time ranging, then no need to send this command, cause slave will stop ranging automatically after ranging is finished.

4、reading slave status(0x80)

Master sends		
Command code	Parameter	Description
0x80	None	
Slave responses		
Recognition code	Parameter	Description
0x20	byte1	D7： 1 = Busy; 0 = Ranging finished, Master can read result; D6： 1 = Module has some error; D5 - D2: Reserve; D1： 1 = Angle senser enabled; D0： 1 = Angle sensor has some error;
	byte2	Reserve

5、Read range finder result(0x81)

Master sends		
Command code	Parameter	Description
0x81	None	
Slave responses		
Recognition code	Parameter	Description
0x01	byte1	D7： 1 = Distance is invalid; D6： 1 = Angle is invalid; D5： Data resolution, 0 = 0.5/LSB； 1 = 0.1/LSB; D4： Data unit, 0 = meter; 1 = yard; D3 - D0： Working Mode, 0 = Ranging; 1 = Speed;
	byte2	When distance is valid： Distance[D15..D8]； When distance is invalid： 0x80 = Ranging no result; 0x81= System error;
	byte3	When angle is valid: Distance[D7..D0]； When angle is invalid: Reserve;
	byte4	Angle[D7..D0]: Data is 2's complement format; When measuing speed, not sending angle data;

Example

1、slave sends distance frame: 0x10 0x01 0x20 0x12 0xD7 0xFE 0xF8
distance value = 0x12D7 = 4823 = 482.3m
angle vlaue = 0xFE = -2°

2、slave sends speed frame： 0x10 0x01 0x21 0x03 0xD7 0x04
speed value = 0x03D7 = 983 = 98.3km/h

3、slave sends distance frame： 0x10 0x01 0xA0 0x80 0x00 0x01 0xDE
distance value null (First byte is 0xA0, D7 = 1)
angle value = 0x01 = +1°

6、Write slave communication baud rate(0x9E)

Master sends		
Command code	Parameter	Description
0x9E	byte1	has to be 0x90
	byte2	Reserve
	byte3	Reserve
	byte4	baud rate setting: 0 = 1200BPS; 1 = 2400BPS; 2 = 4800BPS; 3 = 9600BPS; 4 = 19200BPS(Default);
Slave responses		
Recognition code	Parameter	Description
（please refer to the slave respons part of reading slave parameter）		
Example		
If master sends frame: 0x10 0x9E 0x90 0x00 0x00 0x04 0xCE; It's means: Set baud rate of slave as 19200BPS,		

Note:New baud rate is only valid after module is restarted.

7、Write slave address(0x9E)

Master sends		
Command code	Parameter	Description
0x9E	byte1	Must be 0x91
	byte2	Reserve
	byte3	Reserve
	byte4	slave new address(slave address can't be 0);
Slave responses		
Recognition code	Parameter	Description
（please refer to the slave respons part of reading slave parameter）		
Example		
To write slave address as 0x20, then master sends: 0x10 0x9E 0x91 0x00 0x00 0x20 0xB1		

Note: 1. New slave address is valid after the device is restarted

2. 0x00 is broadcast address, so slave address can't be set as 0x00;

3. Default slave address is 0x10;

8、Write measured result export method(0x9E)

Master sends		
Command code	Parameter	Description
0x9E	byte1	Must be 0x92
	byte2	Reserve
	byte3	Reserve
	byte4	Measured result export method selecttiong: 0 = **Query mode**(slave can only export data when master sends reading command) 1(Default) = Automatic mode (After ranging finished, it sends out data automatically);
Slave responses		
Recognition code	Parameter	Description
（Please refer to the slave respons part of reading slave parameter）		
Example		
To change data export to automatic exporting, then master sends： 0x10 0x9E 0x92 0x00 0x00 0x01 0xCF		

9、Set UART IO voltage (0x9E)

Example		
Command code	Parameter	Description
0x9E	byte1	Must be 0x93
	byte2	Reserve
	byte3	Reserve
	byte4	UART IO voltage Setting： 72 - 199，0.025V/LSB；
Slave responses		
Recognition code	Parameter	Description
（please refer to the slave respons part of reading slave parameter）		
Example		
Change UART IO voltage to 3.3V， then master sends： 0x10 0x9E 0x93 0x00 0x00 0x84 0x4B		

Note： VIO = Setting * 0.025V, Default VIO = 3.3V

10、Reading communication parameter (0xBE)

Master sends		
Command code	Parameter	Description
0xBE	byte1	Must be 0x91 or 0x92
Slave responses		
Recognition code	Parameter	Description
0x21	byte1	**Slave address**: 0x01 - 0xFF
	byte2	D4: Data export method ； D3 - D0： Baud Rate setting；
	byte3	UART IO voltage setting

11、Slave sends wrong information（0xE0）

Slave responses		
Recognition code	Parameter	
0xE0	byte1	D7 - D3: Reserve； D2： 1 = Communication parameter error； D1： 1 = Unrecognizable commmand； D0： 1 = Checksum error；

12、Red Laser On/Off（0x8F）

Master Sends		
Command Code	Parameter	
0x8F	byte1	0x00: Red laser OFF; 0x01: Red laser ON;

13、Read Firmware Version(This command was supported only in V7.00 or newer version)

Master Sends		
Command Code	Parameter	
0xC1	There is no	
Slave responses		
Recognition code	Parameter	Make clear
0x61	Byte 0	Majo Version(BCD)
	Byte 1	Minor Version(BCD)
Example		

Slave responses: 0x10 0x61 0x07 0x00 0x98
Data "0x07 0x00" means firmware version is V7.00.

REVISION HISTORY

Revision No.	Description
V1.0	1.First Revision;
V1.1	1.Added Command: Set UART IO voltage;
V2.0	1.Added Command: Red Laser ON / OFF
V3.0	1.Revise some bug;
V4.0	1.Added Command: Read Firmware Version; 2.Added Small Target Mode;